84-P-C

This inlets is specially designed for installation in ceilings. The inlet is used to bring air from the attic into the house. Working with ceiling inlets, in turn, helps to pre-heat the temperature of incoming air. The inlet is controlled by means of a central plastic arm.

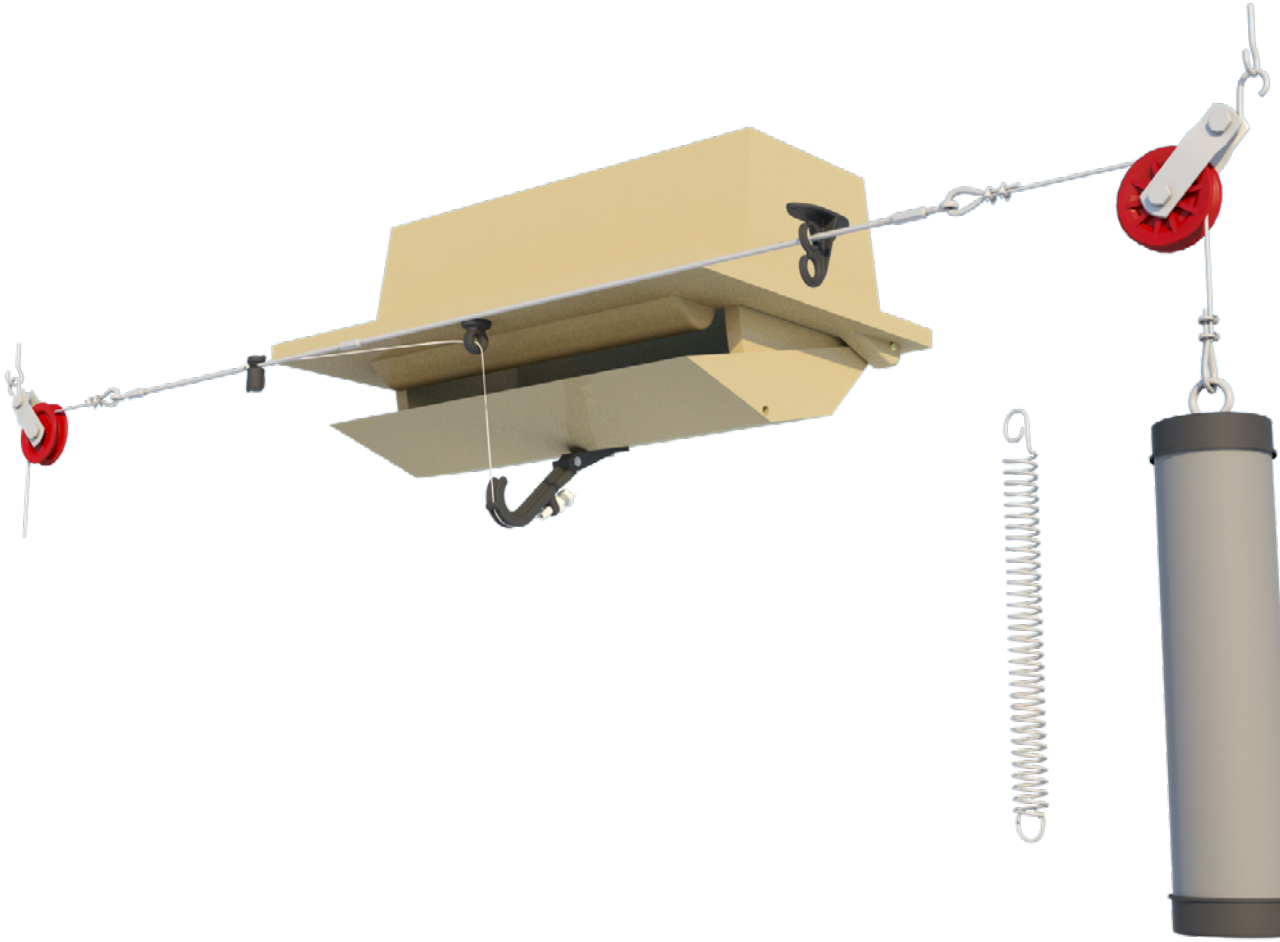

INFO | DATASHEET | ASSEMBLY | MOUNTING | WORKING